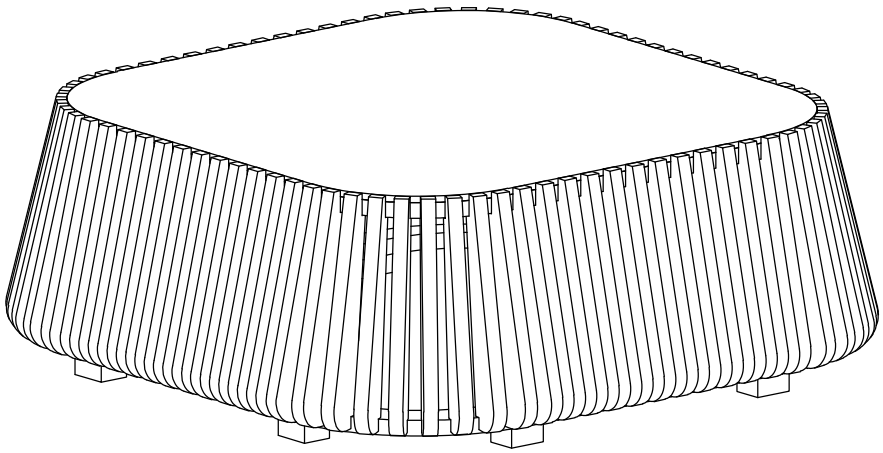

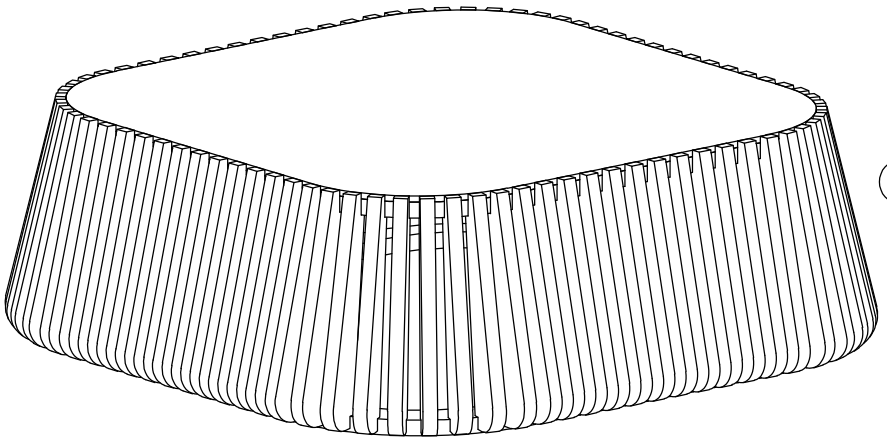

①

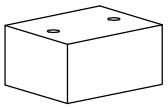

②x8

A		B	
x 16	4×30	x 8	20mm

A		B	
x 16	4×30	x 8	20mm

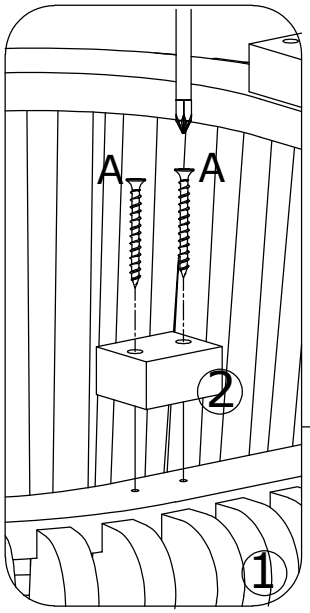

X

8

