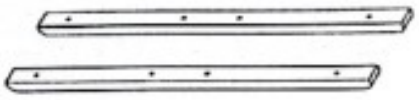

PART LIST

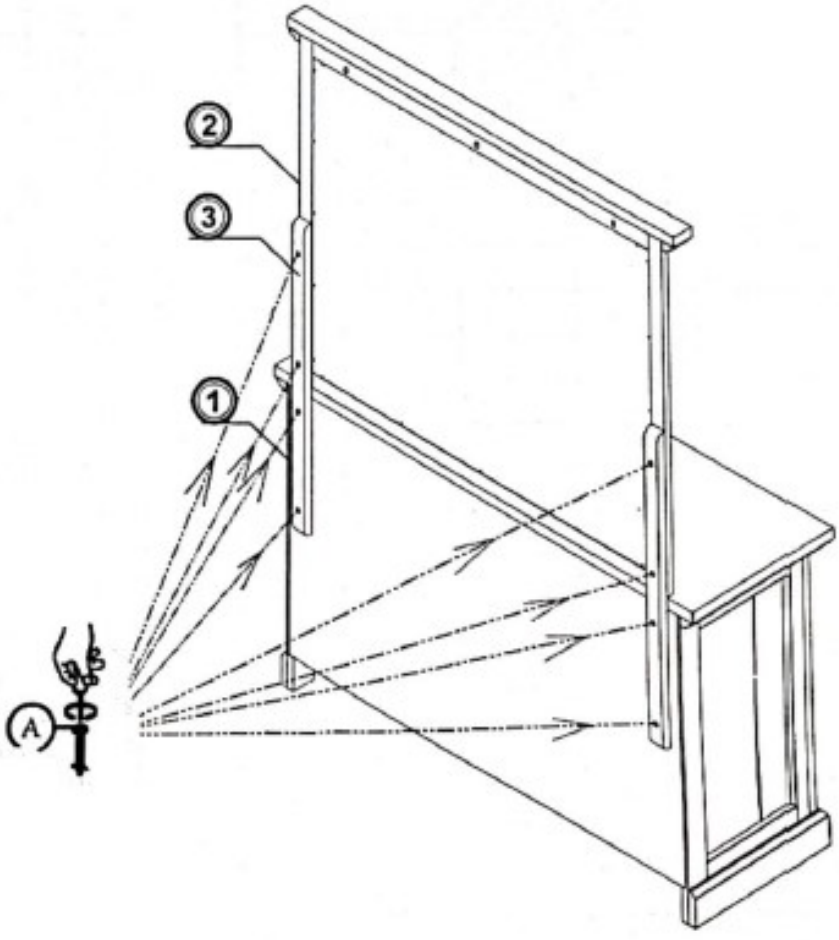
HARDWARE LIST

Ⓐ

M4x30=8 PCS



①	②	③
 Ashton-DR7 =1 PCS	 Ashton-FM =1 pcs	 Mirror Support Bar = 2 pcs



Made in VietNam